IEC-731

Half-size 3-slot Wallmount Chassis

Super Compact with
PISA or ISA backplane
and internal Power Supply

General Specifications

Construction
heavy-duty steel.

Disk Drive Housing
one 2½" HDD

Switches & Indicators
power switch and reset switch on backpanel
three indicator LEDs on front panel

Connector Holes
DB-25 and DB-9 on back panel

Cooling Fan
one ball bearing fan under backplane

Dimensions
88.5 (W) x 205 (H) x 218 (D) mm.

Weight
2.05 Kg

Environmental

Operating temperature
0 ~ 55°C (storage 0 ~ 70°C)

Humidity
5 to 95% non-condens..

Vibration (operating)
5 to 17 Hz, 0.1" double-amplit. displacement;
17 to 500 Hz, 1.5 G acceleration peak to peak

Shock (operating)
10 G acceleration peak (11 ms duration)

Safety
UL/CSA/TÜV/CE/FCC apprvd.

EMI
Meets FCC/VDE Class A

Power Supply Options

IPS-SNP-8071-A
70 W Power Supply (custom size)
V_{INTPUT} : 100~240 V_{AC}
@ 47~63 Hz, auto-switching
V_{OUTPUT} (max. load) : +5 V @ 7 A,
+12 V @ 2.5 A, -12V @ 2.5 A

Passive Backplane Options

PBI-3S
3-slot ISA-bus Passive Backplane

PBP-3S
3-slot PISA-bus Passive Backplane
2 x PCI, 1 x PISA

Ordering

IEC-731-S3-FR70 : Half-size, Mini Chassis
with 3-slot ISA Passive Backplane
and 70 W Power Supply
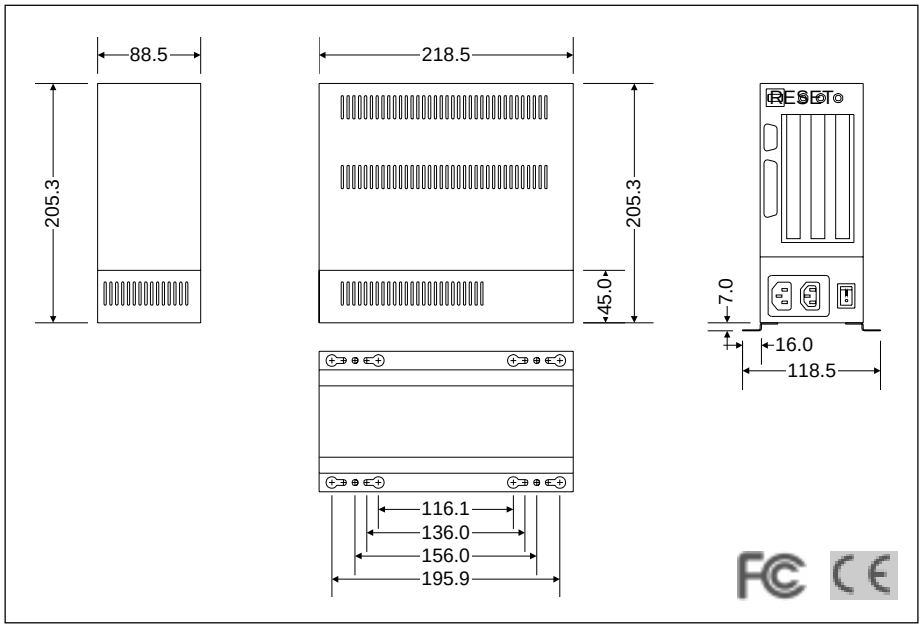
IEC-731-P3-FR70 : Half-size, Mini Chassis
with 3-slot PISA Passive Backplane
and 70 W Power Supply